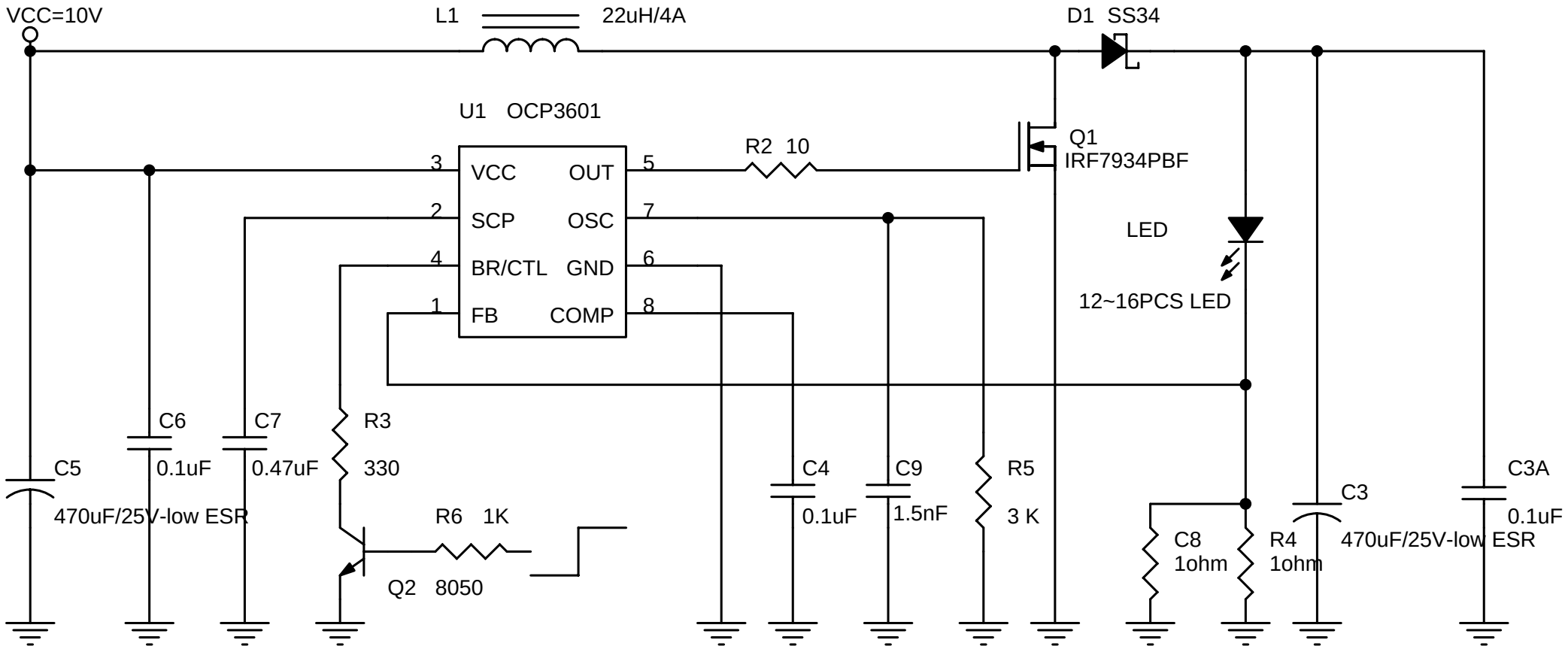


| | | |
|---|---|---|
| Title | 12~16PCS 1A LED drive circuit | |
| Size | Document Number <Doc> | Rev 0.1 |
| Date: Wednesday, July 07, 2010 | Sheet 1 of 1 | |